Choob Dreamer overdrive

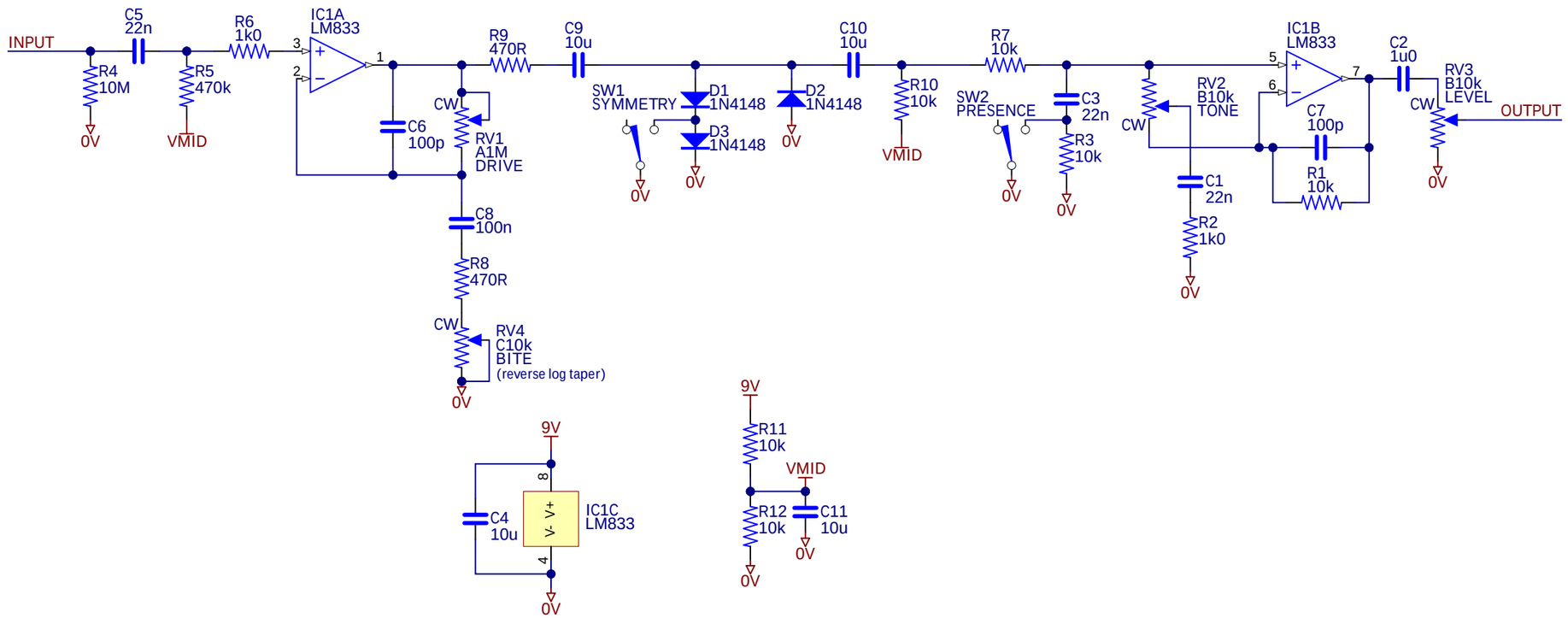

Choob Dreamer			J Reckless 2023
Size: 11x17	No: CT048	Revision: B.0	
Date: 2/12/2023		Sheet: 1 of 1	
File: choob_screamer.SchDoc			