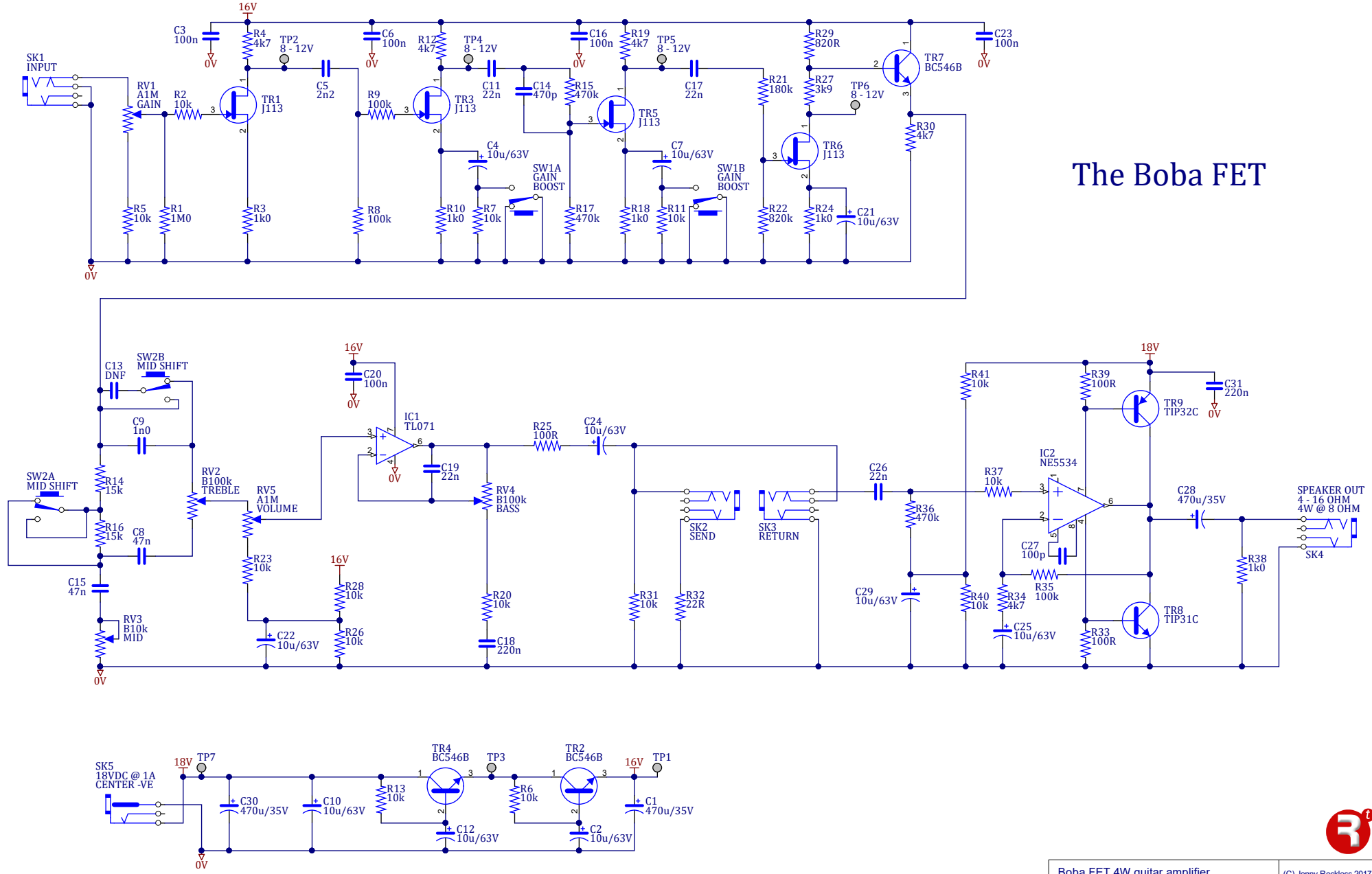

Boba FET 4W guitar amplifier		(C) Jonny Reckless 2017
Size: A3	No: CT050	Revision: F.2
Date: 9/6/2017		Sheet 1 of 1
File: Sheet1.SchDoc		