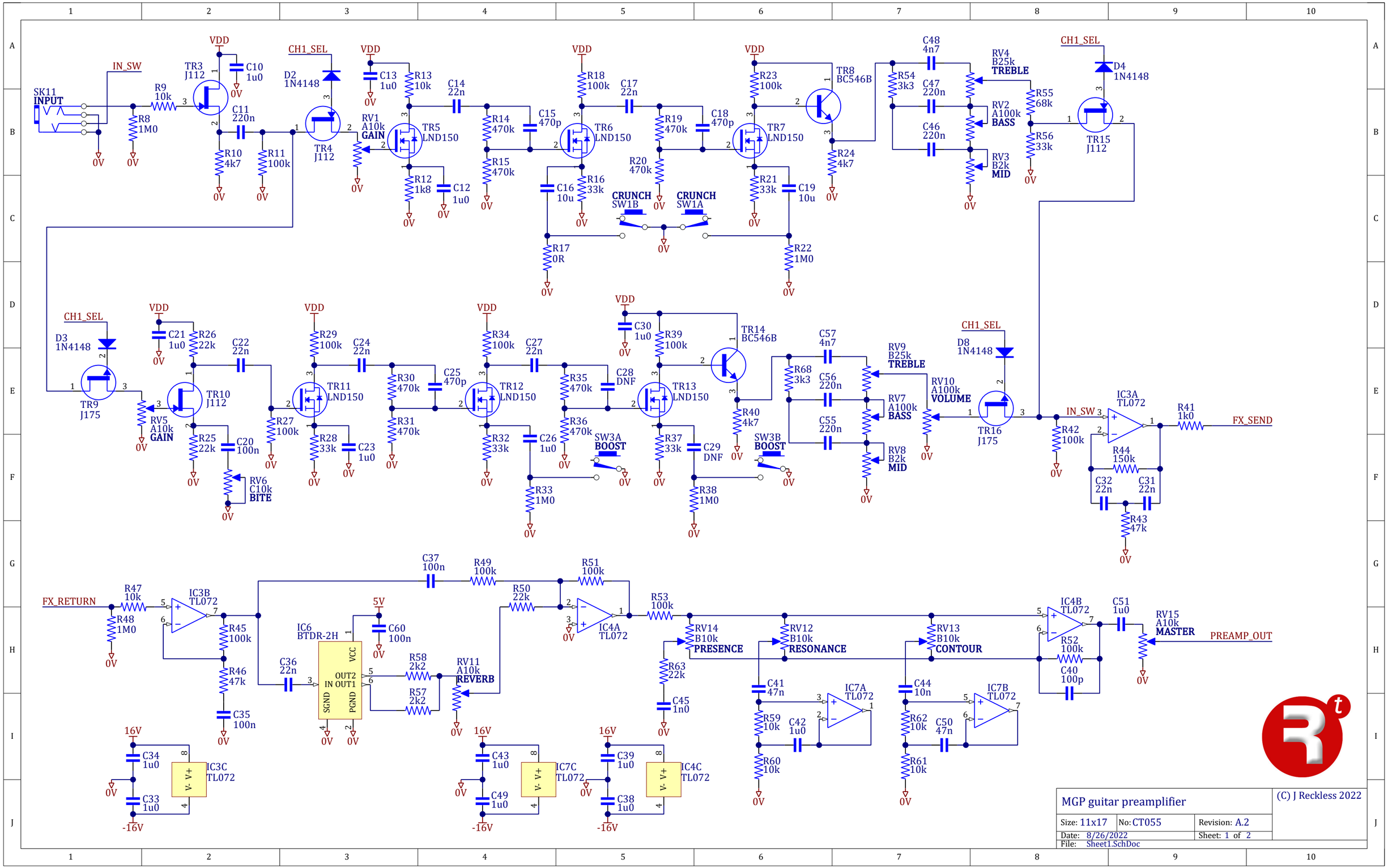

MGP guitar preamplifier

(C) J Reckless 2022

Size: 11x17 | No: CT055 | Revision: A.2

Date: 8/26/2022 | Sheet: 1 of 2

File: Sheet1.SchDoc

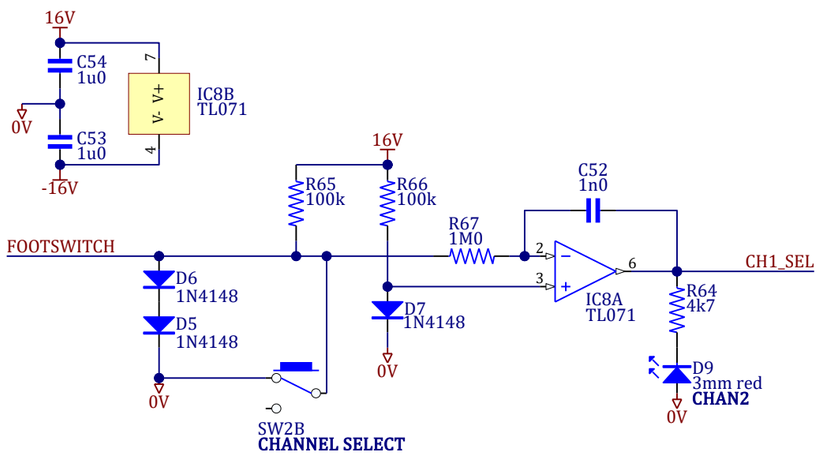

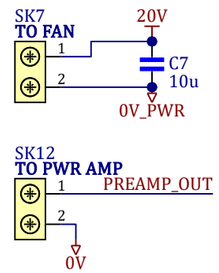

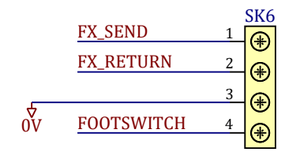

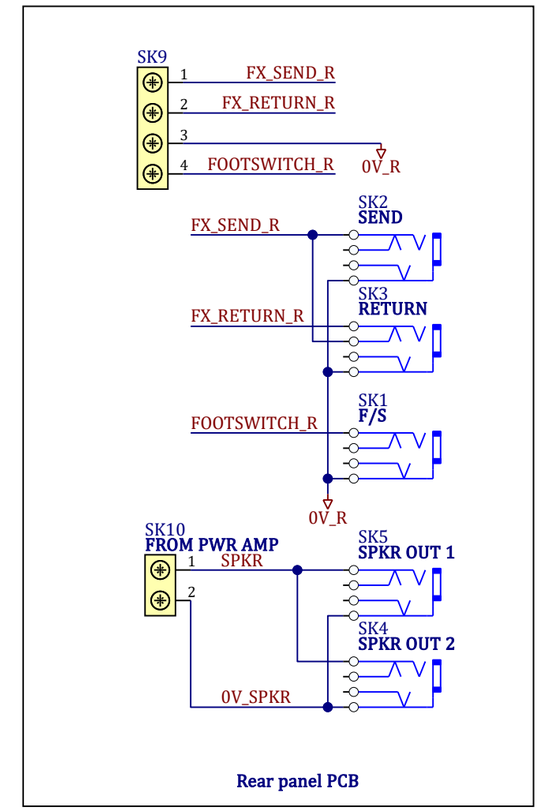

U_Sheet1
Sheet1.SchDoc

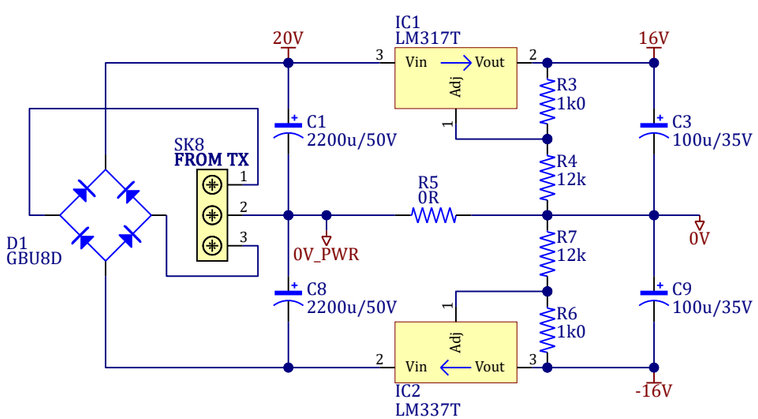

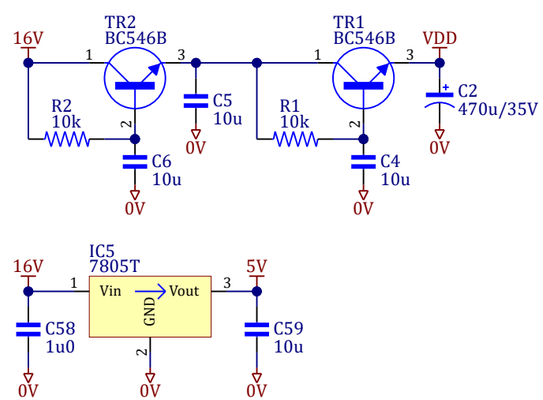

MGP guitar preamplifier			(C) J Reckless 2022
Size: 11x17	No: CT055	Revision: A.2	
Date: 8/26/2022		Sheet: 2 of 2	
File: Sheet2.SchDoc			